ProSource Packaging, Inc.
14911 Stuebner Airline Suite A
Houston, TX 77069
800-203-0233
www.Machine-Solution.com

Mod. 1033 B
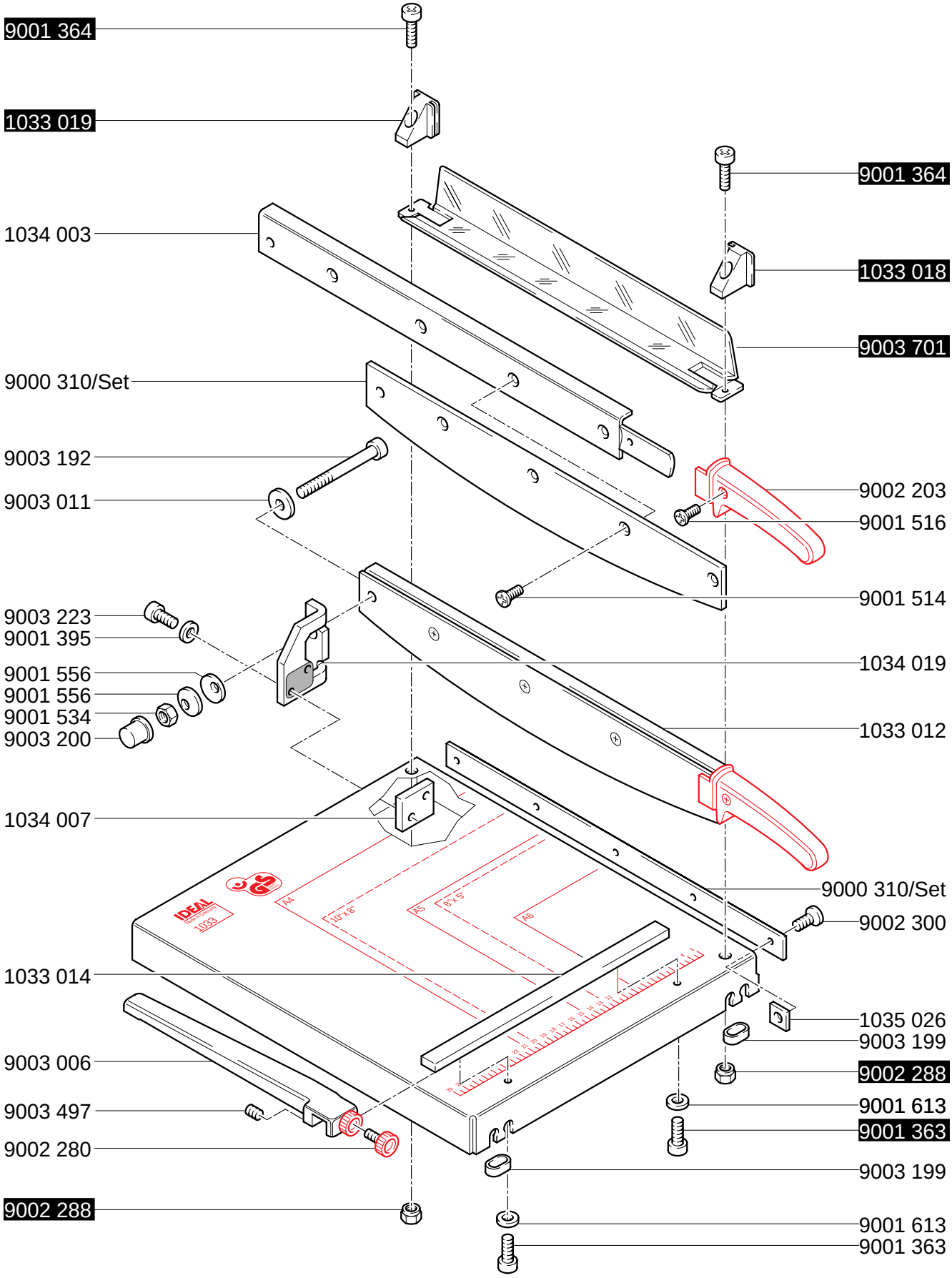
01.08.1997