ProSource Packaging, Inc.
14911 Stuebner Airline Suite A
Houston, TX 77069
800-203-0233
www.Machine-Solution.com

Mod.1042 A
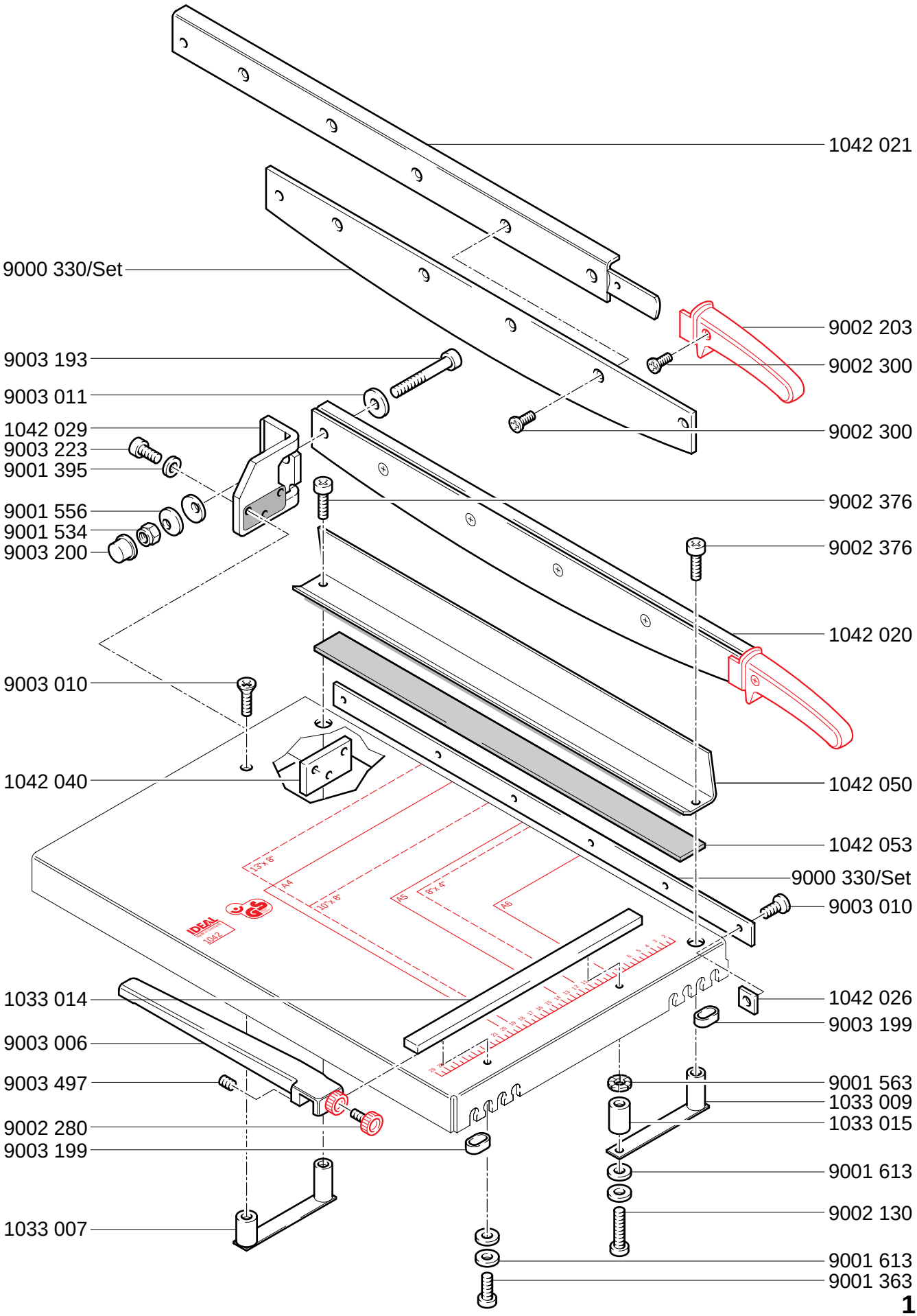
01.07.1998